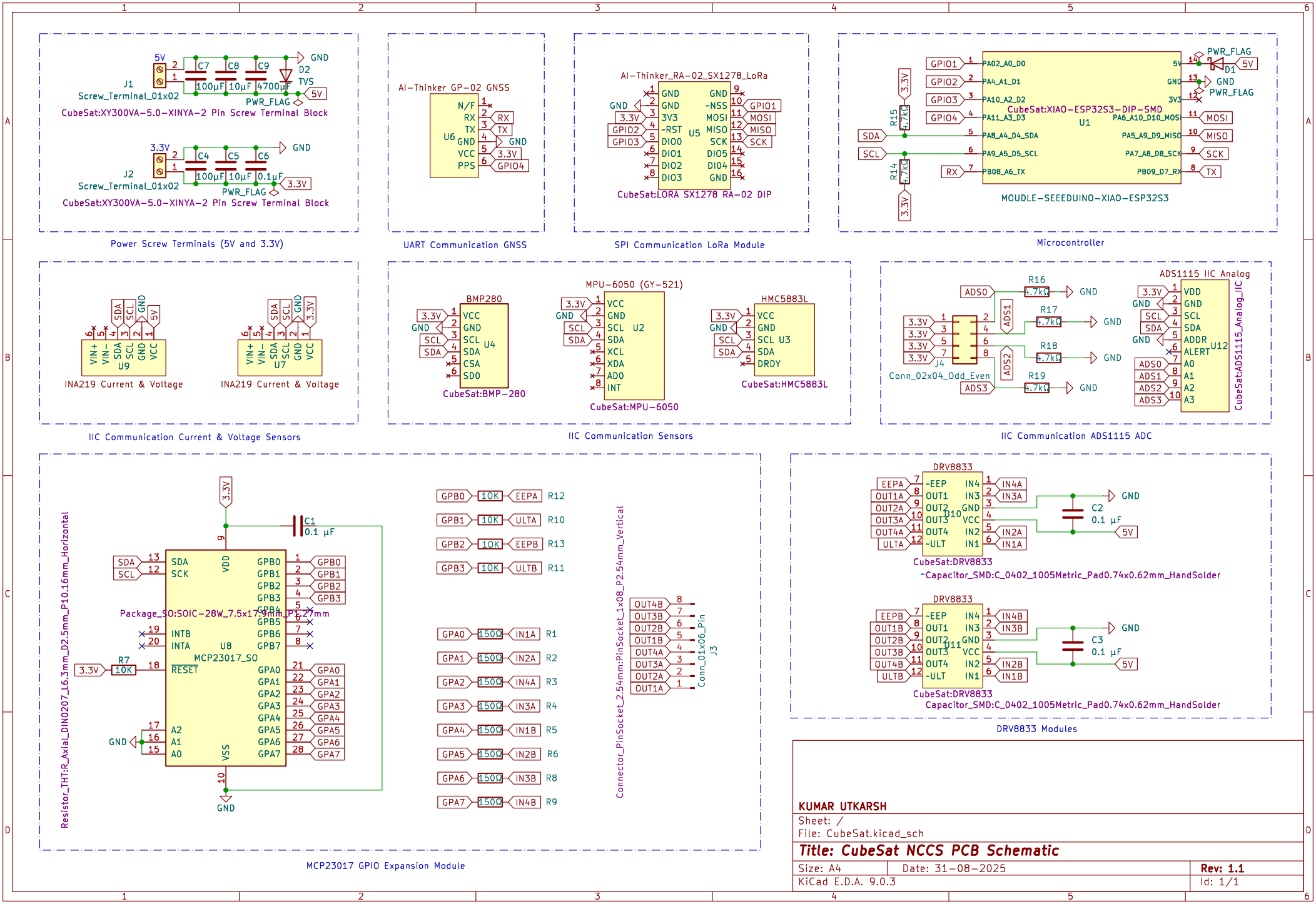
Power Screw Terminals (5V and 3.3V)
J1
Screw_Terminal_01x02
CubeSat:XY300VA-5.0-XINYA-2 Pin Screw Terminal Block
J2
Screw_Terminal_01x02
CubeSat:XY300VA-5.0-XINYA-2 Pin Screw Terminal Block
UART Communication GNSS
Al-Thinker GP-02 GNSS
U6
SPI Communication LoRa Module
Al-Thinker_RA-02_SX1278_LoRa
U5
CubeSat:LORA SX1278 RA-02 DIP
Microcontroller
U1
CubeSat:XIAO-ESP32S3-DIP-SMD
MOUDLE-SEEEDUINO-XIAO-ESP32S3
IIC Communication Current & Voltage Sensors
U9
INA219 Current & Voltage
U7
INA219 Current & Voltage
IIC Communication Sensors
BMP280
U4
CubeSat:BMP-280
MPU-6050 (GY-521)
U2
CubeSat:MPU-6050
HMC5883L
U3
CubeSat:HMC5883L
IIC Communication ADS1115 ADC
ADS1115 IIC Analog
U12
CubeSat:ADS1115_Analog_IIC
Conn_02x04_Odd_Even
J4
DRV8833 Modules
DRV8833
U10
CubeSat:DRV8833
~Capacitor_SMD:C_0402_1005Metric_Pad0.74x0.62mm_HandSolder
DRV8833
U11
CubeSat:DRV8833
Capacitor_SMD:C_0402_1005Metric_Pad0.74x0.62mm_HandSolder
MCP23017 GPIO Expansion Module
U8
MCP23017_SO
Package_SO:SOIC-28W_7.5x17.9mm_P1.27mm
Resistor_THT:R_Axial_DIN0207_L6.3mm_D2.5mm_P10.16mm_Horizontal
Connector_PinSocket_2.54mm:PinSocket_1x08_P2.54mm_Vertical
Conn_01x06_Pin
J3
KUMAR UTKARSH
Sheet: /
File: CubeSat.kicad_sch
Title: CubeSat NCCS PCB Schematic
Size: A4
Date: 31-08-2025
Rev: 1.1
KiCad E.D.A. 9.0.3
Id: 1/1